TWIN FLEX SERIES: MSS, MST, MSU, T2, T3

NON-METALLIC EXPANSION JOINTS RUBBER AND TEFLON®

TWIN CITY HOSE - THE PROBLEM SOLVERS

Twin City Hose can solve all your non-metallic expansion joint problems - Rubber and Teflon®. Look inside and see what Twin City Hose can do for your company. Twin City Hose wants to be your one-source problem solving manufacturer and supplier.

Bulletin #MS-T
1/04

TWIN CITY HOSE, INC. PHONE [763] 428-5100 FAX [763] 428-5111

TWIN FLEX "MS" MOLDED RUBBER SPHERE-TYPE EXPANSION JOINTS

Is your current piping system causing you problems?. . .

- **Excessive noise and dangerous vibration**
- **Thermal growth-harming valuable equipment**
- **Misalignment among piping elements**

All these problems carry a high price, a very high price: Exorbitant maintenance costs, early metal fatigue and a noisy plant. In short, the premature death of your piping system and equipment!

That's why you need answers **NOW!**

That's why you need help **NOW!**

How To Solve Your Motion Problems.

Non-metallic expansion joints/flexible connectors are your answer. They'll minimize mechanical vibration in your system by isolating the vibration at the connection. They'll absorb thermal growth motion and compensate for misalignment, protecting the investment you've already made in piping and equipment.

Flexible connectors also minimize stress and early fatigue problems. Remember, less vibration equals less noise. Your plant runs quieter and safer with the addition of flexible connectors.

The answer to your motion problems are **expansion joints/ flexible connectors.** By integrating these shock absorbers with your current piping system, you'll be lengthening your investment's life time and insuring its safety.

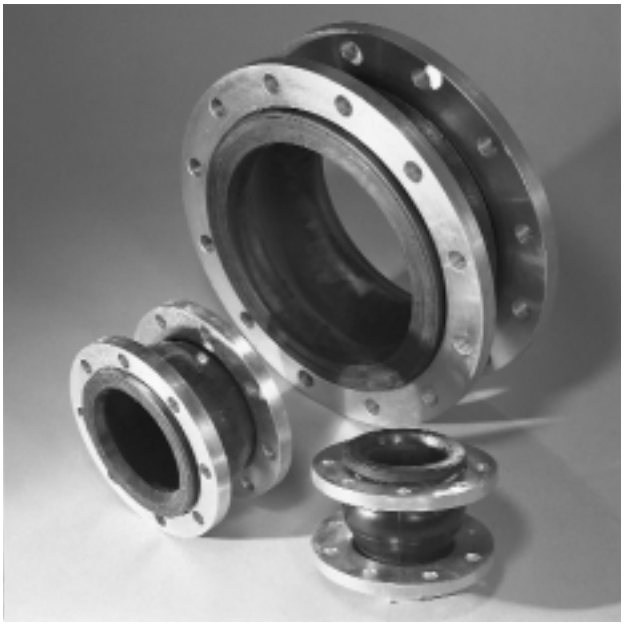

Why You Need Twin City Hose

Twin City Hose gives you the fast response you need when problems occur. Same day service is available. . . at **NO EXTRA CHARGE!**

Your exact needs can be met by Twin City Hose

You'll get exactly what your specific job requires. All Twin City Hose products are manufactured from the highest quality materials. In addition to the products shown in this catalog, there are numerous other styles of rubber and Teflon® expansion joints/flexible connectors available depending on the pressures, temperatures and media. Twin City Hose can solve any problem you have.

Call Now. . . We're Ready To Help.

Call Twin City Hose with all of your non-metallic expansion joint/flexible connector problems. Whatever the problem, we've got the solution.

We're Twin City Hose, the problem solvers

(Refer to chart #1 on opposite page)

MSU

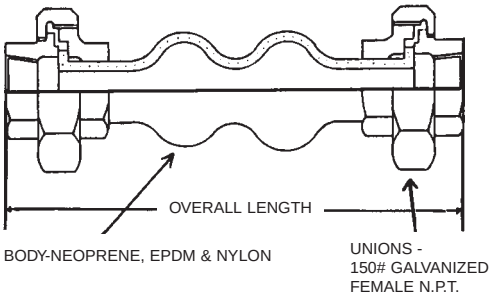

MSS

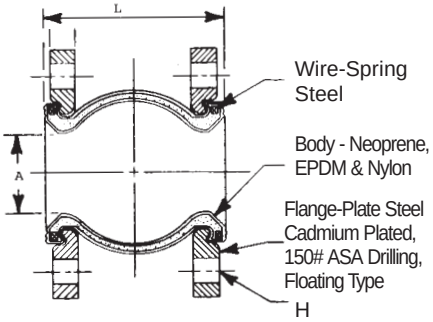

MST

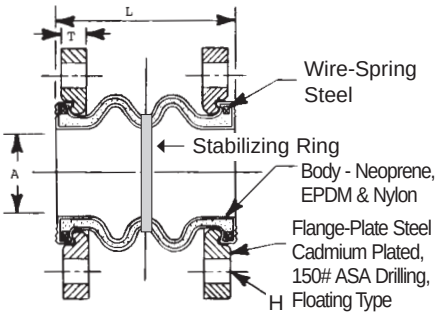

TWIN CITY HOSE, INC. PHONE [763] 428-5100 FAX [763] 428-5111

Chart #1

Model Number	A Pipe Size	L Face To Face	Approx. Weight (LB)	Holes		Motions			
				No. Holes	Size	Lateral Def.	Ext.	Comp.	Ang. Def.
MSU075	3/4″	8″	2	NA	NA	± 7/8″	1/4″	7/8″	45º
MSU100	1″	8″	3	NA	NA	± 7/8″	1/4″	7/8″	45º
MSU125	1-1/4″	8″	4	NA	NA	± 7/8″	1/4″	7/8″	45º
MSU150	1-1/2″	8″	5	NA	NA	± 7/8″	1/4″	7/8″	45º
MSS150	1-1/2″	6″	7	4	1/2″	±1/2″	3/8″	1/2″	27º
MST150	1-1/2″	7″	8	4	1/2″	± 1-3/4″	1-1/8″	2″	45º
MSU200	2″	8″	6	NA	NA	± 7/8″	1/4″	7/8″	45º
MSS200	2″	6″	9	4	5/8″	±1/2″	3/8″	1/2″	20º
MST200	2″	7″	10	4	5/8″	± 1-3/4″	1-1/8″	2″	45º
MSU250	2-1/2″	8″	8	NA	NA	± 7/8″	1/4″	7/8″	45º
MSS250	2-1/2″	6″	13	4	5/8″	±1/2″	3/8″	1/2″	17º
MST250	2-1/2″	7″	14	4	5/8″	± 1-3/4″	1-1/8″	2″	43º
MSS300	3″	6″	14	4	5/8″	±1/2″	3/8″	1/2″	14º
MST300	3″	7″	16	4	5/8″	± 1-3/4″	1-1/8″	2″	38º
MSS400	4″	6″	19	8	5/8″	±1/2″	1/2″	3/4″	14º
MST400	4″	9″	21	8	5/8″	±1-1/2″	1-3/8″	2″	34º
MSS500	5″	6″	23	8	3/4″	±1/2″	1/2″	3/4″	11º
MST500	5″	9″	25	8	3/4″	±1-1/2″	1-3/8″	2″	29º
MSS600	6″	6″	27	8	3/4″	±1/2″	1/2″	3/4″	9º
MST600	6″	9″	30	8	3/4″	±1-1/2″	1-3/8″	2″	25º
MSS800	8″	6″	41	8	3/4″	±3/4″	1/2″	3/4″	7º
MST800	8″	13″	44	8	3/4″	± 1-3/8″	1-3/8″	2-3/8″	19º
MSS010	10″	8″	57	12	7/8″	±3/4″	3/4″	1″	7º
MST010	10″	13″	66	12	7/8″	± 1-3/8″	1-3/8″	2-3/8″	15º
MSS012	12″	8″	83	12	7/8″	±3/4″	3/4″	1″	6º
MST012	12″	13″	95	12	7/8″	± 1-3/8″	1-3/8″	2-3/8″	13º
MSS014	14″	8″	115	12	1″	±3/4″	3/4″	1″	5º
MST014	14″	13-3/4″	112	12	1″	± 1-1/8″	1-1/8″	1-3/4″	9º
MSS016	16″	8″	165	16	1″	±3/4″	3/4″	1″	4º
MST016	16″	13-3/4″	132	16	1″	± 1-1/8″	1-1/8″	1-3/4″	8º
MSS018	18″	8″	168	16	1-1/8″	±3/4″	3/4″	1″	4º
MST018	18″	13-3/4″	146	16	1-1/8″	± 1-1/8″	1-1/8″	1-3/4″	7º
MSS020	20″	8″	170	20	1-1/8″	±3/4″	3/4″	1″	3º
MST020	20″	13-3/4″	182	20	1-1/8″	± 1-1/8″	1-1/8″	1-3/4″	7º
MSS024	24″	10″	255	20	1-1/4″	±3/4″	3/4″	1″	3º
MST024	24″	13-3/4″	220	20	1-1/4″	± 1-1/8″	1-1/8″	1-3/4″	6º

Available Tube & Cover Options: Neoprene, EPDM, Buty, Nitrile

DESIGN DATA

1) **Max. Positive Press: Size (1-1/2″-12″ – 225 PSI) (14″ – 150 PSI) (16″-20″ – 125 PSI) (24″ – 110 PSI)**
2) **Max. Negative Press: 26″ HG Vacuum**
3) **Temperature: 20ºF-300ºF**
4) **Listed Movements Cannot Occur Simultaneously**

Control Rod Unit Applications

Control rod units are designed to absorb static pressure thrust developed at the expansion joint. The control rod units are an **additional safety factor**, minimizing possible failure of the expansion joint or damage to the equipment when used in this manner. If pressures exceed the stated pressures in chart #2 below, or are unknown, we strongly recommend the installation of Control Rod Units.

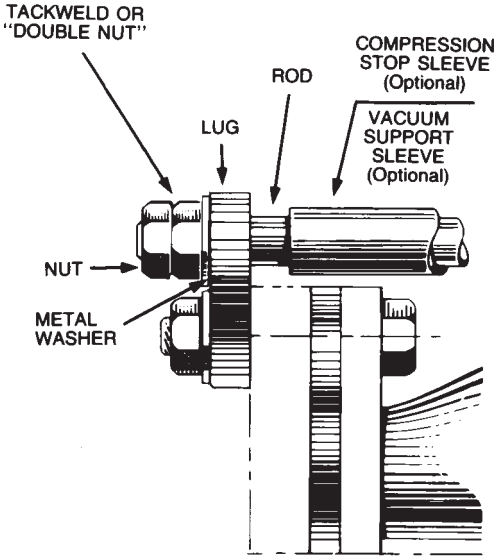

Chart #2

Control units must be installed when pressures (working • test • surge) exceed rating below:

Pipe Size	MSS	MST
1″ thru 4″	180	135
5″ thru 10″	135	135
12″ thru 14″	90	90
16″ thru 24″	45	45

OTHER SIZES AND CONFIGURATIONS AVAILABLE UPON REQUEST

TWIN CITY HOSE, INC. PHONE [763] 428-5100 FAX [763] 428-5111

TWIN FLEX "T2", "T3" TEFLON® EXPANSION JOINTS

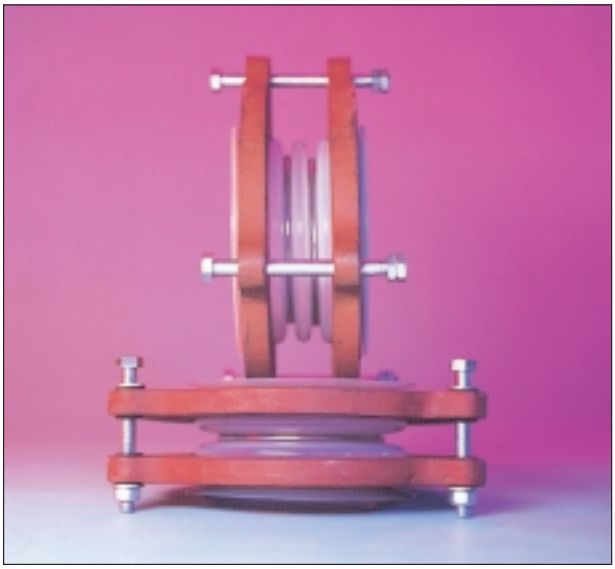

Teflon® Expansion Joint Pressure Rating (PSI)					
Tempº F	T2 (2 corr)			T3 (3 corr)	
	1″-6″ ID	8″-10″ ID	12″ ID	1″-6″ ID	8″-10″ ID
50º	200	175	85	150	130
150	150	120	50	105	90
250	115	100	35	75	65
350	80	75	30	50	45

T2 Flexible Coupling

Part No.	Nominal Size (I.D.)	A Neutral Length	A Maximum Travel + Or -	B	C	Maximum Mis-Alignment*	Weight (Lbs.)
T2TEJ100	1″	1-3/8″	1/4″	2″	1-7/8″	1/8″	2
T2TEJ150	1-1/2″	1-3/8″	1/4″	2-7/8″	2-27/64″	1/8″	3
T2TEJ200	2″	1-9/16″	1/4″	3-5/8″	3″	1/8″	7
T2TEJ250	2-1/2″	2-1/4″	5/16″	4-1/8″	3-1/2″	1/8″	10
T2TEJ300	3″	2-1/4″	3/8″	5″	4-1/4″	3/16″	12
T2TEJ400	4″	2-5/8″	1/2″	6-3/16″	5-1/2″	1/4″	18
T2TEJ500	5″	3-1/4″	1/2″	7-5/16″	6-1/2″	1/4″	24
T2TEJ600	6″	2-3/4″	1/2″	8-1/2″	8″	1/4″	29
T2TEJ800	8″	4″	1/2″	10-5/8″	10-5/64″	1/4″	47
T2TEJ010	10″	5-1/4″	1/2″	12-3/4″	11-3/4″	1/4″	64
T2TEJ012	12″	6″	1/2″	15″	15-7/8″	1/4″	115

* At neutral length with limit bolts in place. Maximum (axial) travel is based on installation with no misalignment or angular deflection. 12" size supplied only with crest rings in stainless steel. NOTE: Angular deflection approx. 7 degrees.

T2

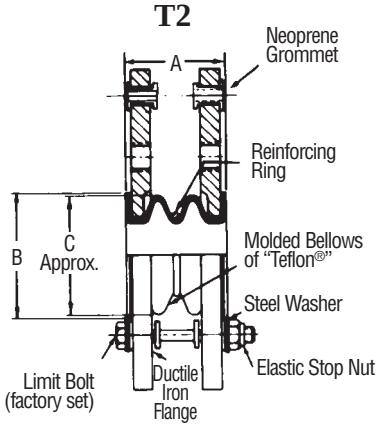

T3 Expansion Joint

Part No.	Nominal Size (I.D.)	A Neutral Length	A Maximum Travel + Or -	B	C	Maximum Mis-Alignment*	Weight (Lbs.)
T3TEJ100	1″	1-3/4″	1/2″	2″	1-57/64″	1/4″	2
T3TEJ150	1-1/2″	2″	1/2″	2-7/8″	2-35/64″	1/4″	4
T3TEJ200	2″	2-3/4″	3/4″	3-5/8″	3-13/32″	3/8″	8
T3TEJ250	2-1/2″	3-3/16″	3/4″	4-1/8″	3-13/16″	3/8″	11
T3TEJ300	3″	3-5/8″	1″	5″	4-41/64″	1/2″	13
T3TEJ400	4″	3-5/8″	1″	6-3/16″	5-11/16″	1/2″	19
T3TEJ500	5″	4″	1″	7-5/16″	6-5/8″	1/2″	25
T3TEJ600	6″	4″	1-1/8″	8-1/2″	8″	9/16″	30
T3TEJ800	8″	6″	1-1/8″	10-5/8″	10-5/16″	9/16″	48

* At neutral length with limit bolts in place. Maximum (axial) travel is based on installation with no misalignment or angular deflection. 12" size supplied only with crest rings in stainless steel. NOTE: Angular deflection approx. 14 degrees.

T3

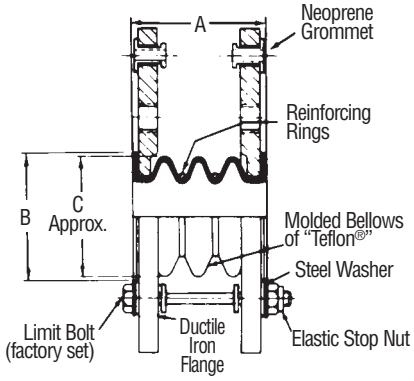

® Teflon is a registered trademark of Dupont

American Society of Heating, Refrigerating and Air-Conditioning Engineers, Inc.

NAHAD NATIONAL ASSOCIATION OF HOSE AND ACCESSORIES DISTRIBUTORS

MEMBER NPGA National PROPANE GAS Association

DISTRIBUTED BY:

TWIN CITY HOSE, INC. PHONE [763] 428-5100 FAX [763] 428-5111